ACCREDITED SPORTING AND TECHNICAL REGULATIONS GOVERNING THE 2026

- NORTH ISLAND 3 HOUR OR 500KM ENDURANCE SERIES
- SOUTH ISLAND 3 HOUR OR 500KM ENDURANCE SERIES
- NEW ZEALAND 3 HOUR OR 500KM ENDURANCE CHAMPIONSHIP

The 2026 North Island 3 Hour or 500km Endurance Series, 2026 South Island 3 Hour or 500km Endurance Series, and 2026 New Zealand 3 Hour or 500km Endurance Championship are all organised and held in accordance with the current MotorSport New Zealand National Sporting Code, the Standing Regulations applicable to all Races (Schedule Z), these Sporting and Technical Regulations, and the Event Supplementary Regulations applicable to, and issued by the Inviting Club of each Round of the Series.

These Regulations are at all times to be read in conjunction with:

- The current MotorSport New Zealand National Sporting Code (NSC) and its appropriate Appendices and Schedules; and
- The Event Supplementary Regulations issued by the Inviting Club.

CONTENTS

~~**Part One:** 2026 North Island 3 Hour or 500km Endurance Series~~

Part Two: 2026 South Island 3 Hour or 500km Endurance Series

Part Three: 2026 New Zealand 3 Hour or 500km Endurance Championship

Part Four: Driver and Vehicle Eligibility

Part Five: Race Formats

Part Six: Race Operational Procedures

Part Seven: Penalties

OFFICIAL RECORD OF AMENDMENTS

This table records all official Amendments issued during the season relative to these Regulations:

Amendment Number	Issue/Effective Date	Article Reference	Subject/Notes
3HR/500KM-26-001	20 04 2026	Part Four Art 1.1	Correction of two drafting errors; a heading, and number of laps at Manfeild: Circuit Chris Amon
3HR/500KM-26-002	04 05 2026	Part One Art 2.1 Part Two Art 2.1	Appoint Series Scrutineers
3HR/500KM-26-003	25 09 2026	Part One, Two, Three and Four	Removal of North Island Endurance Series 3 Hour / 500KM, update of Calendar(s), Race Director Removal, update of website

INTERPRETATIONS

“Am-Driver” means any Driver who is not currently deemed by the Eligibility Committee to be an Elite Driver.

"Article(s)" means a numbered provision within these Regulations or within the National Sporting Code, as identified by its number (and sub-number, where applicable). Article headings/titles are included for ease of reference only. References to an Article include all sub-clauses of that Article unless otherwise stated.

“Balance of Performance” and **“BOP”** means a series of technical adjustments, primarily affecting weight, power and fuel capacity, but may also include any other performance balancing measures. It is designed to create parity among competing vehicles of a different manufacturer.

“The Championship” means the MotorSport New Zealand 3 Hour or 500km Endurance Racing Championship.

“**Class**” means any of the Classes set out in Part Four, Article 1.2.3.

“**Dedicated overhead rig valve operator**” means the pit stop crew member designated to be responsible for operating the self-closing valve pursuant to Part Six, Article 2.3.

“Eligibility Committee” means a group comprised of both NIERDC and SIERDC representatives who periodically review Elite Driver Status and Vehicle Eligibility.

“Fuel System” means all components of the fuel system of a vehicle from, through or to which fuel flows, including (but not limited to) all fuel tanks; all ancillary, reserve, swirl or surge tanks; and all fuel lines, pumps, fillers and filters.

“Inviting Club” means the MotorSport New Zealand Member Club hosting each Round of each Series.

"National Sporting Code" and **“NSC”** means the current MotorSport New Zealand National Sporting Code and its Appendices and Schedules, which set out the fundamental rules and principles governing the organisation and conduct of events, and to which all Regulations are subject.

“NIERDC” means the North Island Endurance Racing Drivers Club.

“**Pit Box**” means, as applicable to each circuit, the part of the pit lane “working lane” allocated as the area in which competing vehicle must make it’s pit stop(s).

“**Pit Box Control Line**” means, as applicable to each circuit, the line delineating the border of the pit lane “working lane” closest to the pit garage, painted or marked on the pit lane or if there is no line painted or marked, any such marker as determined by the circuit.

"Pit Garage” means, as applicable to each circuit, the area immediately behind the “Pit Box Control Line” allocated to each competition vehicle for the servicing of the vehicle.

"Regulation(s)" means a formal body of rules, or any distinct set of provisions within such a body, approved by MotorSport New Zealand, governing any aspect of a Series or Championship.

“SIERDC” means the South Island Endurance Racing Drivers Club.

“Technical Committee” means a group comprised of NIERDC and SIERDC representatives who can make changes to any vehicles BoP after having an independent technical representative analyse patterns from the vehicle’s data system. They can make changes to the BoP of competing vehicles at any time.

~~PART ONE: 2026 NORTH ISLAND 3 HOUR OR 500KM ENDURANCE SERIES~~

PART TWO: 2026 SOUTH ISLAND 3 HOUR OR 500KM ENDURANCE SERIES

PREAMBLE

The South Canterbury Car Club Inc on behalf of the South Island Endurance Racing Drivers Club hereby declares the following Regulations to be those governing the 2026 South Island 3 Hour or 500km Endurance Series.

These are to read in conjunction with and subject to Part Four (Driver and Vehicle Eligibility), Part Five (Race Formats), Part Six (Race Operational Procedures) and Part Seven (Penalties).

This Series is held under a MotorSport New Zealand Sanctioning Permit No: **269008**

1. SERIES STRUCTURE

1.1 The South Island Endurance 3 Hour or 500km Series comprises the following Rounds:

Round	Date	Venue	Round Organiser
1	3 October 2026	Euromarque Motorsport Park	Canterbury Car Club
2	17 October 2026	Teretonga Park	Southland Sports Club

1.2 The South Island Endurance Series reserves the right to either cancel or amend any Rounds of the Series due to force majeure without in any way affecting its powers to award any title.

1.3 The Round Organiser reserves the right to combine the 2026 South Island 3 Hour or 500km Endurance Series Race with the 2026 South Island 1 Hour Endurance Series Race(s) if total entry numbers are not sufficient or where Force Majeure necessitates such action. In this situation, the combining of Races will be communicated in either Supplementary Regulations Part Two or via an Official Bulletin, along with any changes to specific race procedures.

2. SERIES PERSONNEL

2.1 At each Round of the South Island Endurance Series the following personnel or their approved assistant/s have the responsibilities and authorities set out:

2.1.2 South Island Endurance Series Coordinator:

Name: Cate Bartlett
Phone: 027 841 2560
Email: sierdc@outlook.com

Who has the duties and authority of a Series Coordinator as set out in the National Sporting Code and who is responsible for and authorised on the Club's behalf to:

(a) Deal with all administrative matters including receiving all Round entries;

(b) Record and publish all Series Points schedules; and

(c) Liaise with Inviting Clubs on all matters pertaining to these Regulations.

The Series Coordinator may appoint an assistant(s) to assist with administrative duties in connection with the Series.

2.1.3 South Island Endurance Series Scrutineer:

Name: Cymon Hewitt
Phone: 027 222 9277
Email: d6motorsport@hotmail.com

Who has the duties and authority of a Series Scrutineer as set out in the National Sporting Code and who is responsible for and authorised on the Club's behalf to:

(a) Deal with all technical matters pertaining to the series;

(b) Affix seals, as and when deemed appropriate;

(c) Inspect any competing vehicle within the Series in order to ascertain compliance with the Technical Regulations;

(d) Download and analyse data from each vehicle's BoP logger;

(e) Assist Drivers/Entrants with technical inquiries relative to the Technical Regulations applicable to their vehicle; and

(f) To report, to the Clerk of the Course, any instances where a breach of the Technical Regulations has been identified.

2.1.4 All correspondence must be addressed to the Series Coordinator who is authorised by the South Island Endurance Racing Drivers Club to carry out all the necessary administrative duties for the South Island Endurance Series.

2.1.5 South Island Endurance Technical Committee:
Chair Persons: Mark Petch and Laura Moore.

Who will represent the Committee from both SIERDC and NIERDC on decisions around Vehicle Eligibility, Elite Driver Status, and BoP requirements.

2.1.6 South Island Endurance Committee Members:
Laura Moore (President), Cate Bartlett (Secretary), Barry Moore, George McFarlane, James Hewlett, James Marshall.

Who represent the South Island Endurance Series.

3. REGISTRATION AND ENTRY

3.1 SERIES REGISTRATION:

3.1.1 All Drivers and Entrants must be financial members of a MotorSport New Zealand Member Club **and** the South Island Endurance Racing Drivers Club.

Registration into the Series must be made on the Series Membership Form and submitted for acceptance.

3.1.2 SIERDC reserves the right to accept or decline entries into the Series.

3.1.3 By registering for the Series, all Drivers/Entrants:

(a) Are deemed to be in acceptance of and agree to comply these Regulations as they are presented and those of the National Sporting Code, and

(b) Are at all times responsible for the presentation of their competing vehicle with respect to safety requirements under National Sporting Code Schedule A, and eligibility requirements under these Regulations.

(c) Will comply with any specific requirements of the official Series Sponsor(s), as detailed within these Regulations.

3.2 ROUND ENTRY:

3.2.1 Entry into each Round of the Series must be made via the Inviting Club's entry process as stipulated in the Event Supplementary Regulations.

3.2.2 SIERDC reserves the right to cancel any Race of the Series if less than twelve entries are received, without affecting in any way it's power to award any title.

3.2.3 Should entries received be in excess of the maximum number of starters permitted under either the Circuit Licence, or maximum number of permitted starters as determined by the Inviting Club, entry acceptance will be as follows:

(1) To those Drivers/Entrants who have pre-entered all Rounds of the 2026 South Island 3 Hour or 500km Endurance Series; then

(2) The balance of entries, accepted on a 'first come first served' basis with any overflow to be placed on a 'reserve list' in order of the entries received.

3.2.4 Only the competition race number registered with the NIERDC/SIERDC register may be used. The Championship Coordinator listed in Part Three manages this register. No duplication of race numbers is permitted.

4. DECALS

4.1 SIERDC reserves the right to provide sponsors' windscreen and/or door banners and/or decals for any or all Rounds of the Series, which must be displayed on each competition vehicle.

4.2 All Drivers/Entrants must ensure that their competing vehicle and apparel have the specified spaces reserved for the Series Register and the Series Sponsor at all Rounds of the Series.

4.3 One set of decals will be supplied free of charge by SIERDC and must be applied to the reserved spaces listed in the following table. Any additional sets will be at the cost of the Driver/Entrant. The primary reserved position is as stated first, with a secondary option given in brackets (where an option is allowed).

	Location	Branding Decals/Badges
A	Top of windscreen	TBC
B	Top (or bottom) of rear windscreen	TBC
C	Front door panel, or the rear half of the front mudguard only (both sides)	Series decal 200 mm wide x 400 mm high
D	Within proximity to the side number on both sides of the vehicle	MotorSport New Zealand Accredited Series decal
E	Front and rear of vehicle in number plate area	Individual Round sponsor decals of 350mm wide and 125mm high, that must be on a vertical surface and visible from the front or rear of the vehicle
F	Top left-hand side of the windscreen	Coloured class identification decal and red coloured "Elite" decal for any vehicle that has an Elite Driver entered
G	Rear side windows (both sides)	Driver's name(s) (recommended)

Refer to diagram overleaf to support correct placement.

4.4 Competition Numbers must either:

(a) Comply within the provisions of National Sporting Code Schedule A, Part One Article 6.2; or

(b) Alternatively, each competition vehicle must display a competition number on each rear side window, and on both the front and rear windscreen as outlined in the below diagram.

These must be fluoro yellow in colour and displayed in a durable manner. Each number must be of a minimum size of 150mm high with a width of 20mm.

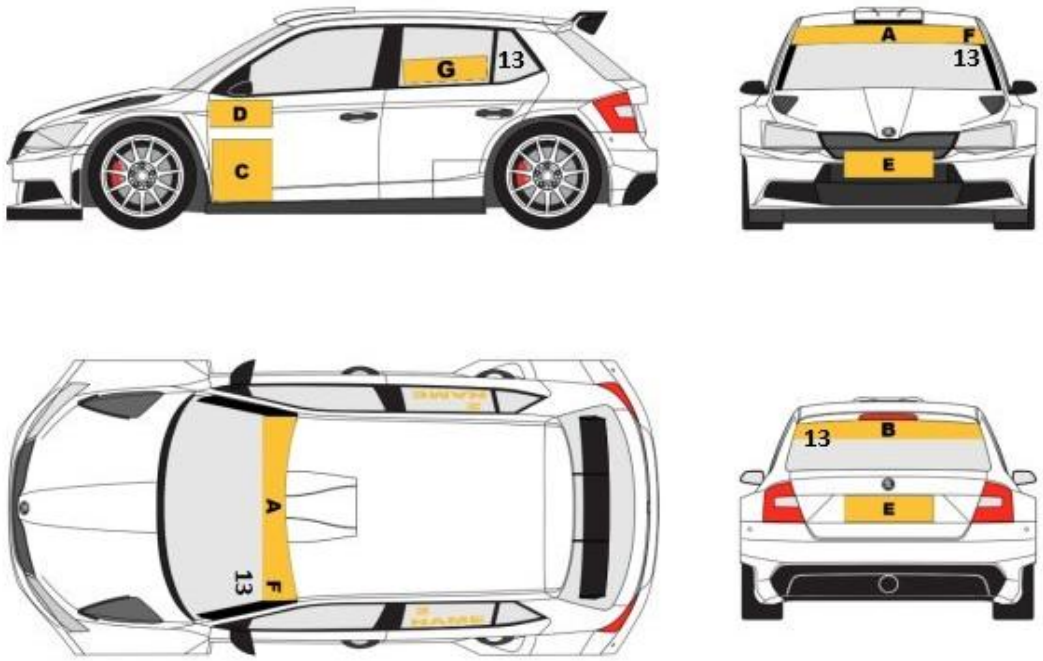

5. SOUTH ISLAND 3 HOUR OR 500KM ENDURANCE SERIES AWARDS

5.1 There will be a total of seven awards; namely:

(a) **Overall Winner – 2026 South Island 3 Hour or 500km Endurance Race Series** which will be awarded to the Driver(s) who have gained the highest aggregate of points throughout all Rounds that constitute the 2026 South Island 3 Hour or 500km Endurance Series.

(b) **Michelin Am-Am Champion – 2026 South Island 3 Hour or 500km Endurance Am-Am Series** which will be awarded to the Am-Driver(s) who have gained the highest aggregate of points throughout all Rounds that constitute the 2026 South Island 3 Hour or 500km Endurance Series.

(c) **GT Class Winner – 2026 South Island 3 Hour or 500km Endurance Series** which will be awarded to the Driver(s) who have gained the highest aggregate of points in GT Class throughout all Rounds that constitute the 2026 South Island 3 Hour or 500km Endurance Series.

(d) **Class 1 Winner – 2026 South Island 3 Hour or 500km Endurance Race Series** which will be awarded to the Driver(s) who have gained the highest aggregate of points in Class 1 throughout all Rounds that constitute the 2026 South Island 3 Hour or 500km Endurance Series.

(e) **Class 2 Winner – 2026 South Island 3 Hour or 500km Endurance Race Series** which will be awarded to the Driver(s) who have gained the highest aggregate of points in Class 2 throughout all Rounds that constitute the 2026 South Island 3 Hour or 500km Endurance Series.

(f) **Class 3 Winner – 2026 South Island 3 Hour or 500km Endurance Race Series** which will be awarded to the Driver(s) who have gained the highest aggregate of points in Class 3 throughout all Rounds that constitute the 2026 South Island 3 Hour or 500km Endurance Series.

(g) **Class 4 Winner – 2026 South Island 3 Hour or 500km Endurance Race Series** which will be awarded to the Driver(s) who have gained the highest aggregate of points in Class 4 throughout all Rounds that constitute the 2026 South Island 3 Hour or 500km Endurance Series.

(h) **Class 5 Winner – 2026 South Island 3 Hour or 500km Endurance Race Series** which will be awarded to the Driver(s) who have gained the highest aggregate of points in Class 5 throughout all Rounds that constitute the 2026 South Island 3 Hour or 500km Endurance Series.

PART THREE: 2026 NEW ZEALAND 3 HOUR OR 500KM ENDURANCE CHAMPIONSHIP

PREAMBLE

MotorSport New Zealand Inc hereby declare the following Regulations to be those governing the 2026 New Zealand 3 Hour or 500km Endurance Racing Championship.

This Championship is held under a MotorSport New Zealand Sanctioning Permit No: **269009**

1. CHAMPIONSHIP STRUCTURE

1.1 The 3 Hour or 500km Championship comprises the following eligible Round:

Date	Venue	Round Organiser
17 October 2026	Teretonga Park	Southland Sports Club

2. CHAMPIONSHIP PERSONNEL

2.1 For each Round of the Championship the following personnel or their approved assistant/s have the responsibilities and authorities set out:

2.1.1 Championship Coordinator:

Name: Raewyn Burke
Phone: 027 244 6405
Email: raewyn@nzigp.co.nz

Who has the duties and authority of a Series Coordinator as set out in the National Sporting Code and who is responsible for and authorised on MotorSport New Zealand's behalf to:

(a) Deal with all administrative matters including receiving all entries into the Championship;

(b) Record and publish all Championship Points schedules; and

(c) Liaise with the NIERDC and SIERDC on all matters pertaining to these Regulations.

The Championship Coordinator may appoint an assistant(s) to assist with administrative duties in connection with the Championship.

2.1.2 Endurance Championship Technical Committee:

Chair Persons: Mark Petch and Laura Moore

Who will represent the Committee from both SIERDC and NIERDC on decisions around Vehicle Eligibility, Elite Driver Status, and BoP requirements.

3. CHAMPIONSHIP REGISTRATION

3.1 Registration into the Championship must be made on the Championship Registration Form provided by the Championship Coordinator and submitted to the Championship Coordinator for acceptance prior to the Championship Round.

3.2 By registering for the Championship, all Drivers/Entrant are deemed to be in acceptance of and agree to comply the Series and Championship Regulations as they are presented and those of the National Sporting Code.

3.3 In the event that entries to the Championship Round are oversubscribed, preference will be given to Drivers/Entrants who have competed in either the 2026 North Island 1 Hour Endurance or 2026 South Island 1 Hour Endurance Accredited Series.

3.4 MotorSport New Zealand reserves the right to cancel the Championship if less than eight entries are received without affecting in any way it's power to award any title.

4. AWARDS

4.1 The following awards will be presented at the annual MotorSport New Zealand Awards Function unless otherwise agreed.

(a) **Overall 2026 New Zealand 3 Hour or 500km Endurance Champion**

(b) **2026 New Zealand 3 Hour or 500km Endurance Am-Am Champion:** The 2026 New Zealand 3 Hour or 500km Endurance Am-Am Champion will be awarded to the Driving Team consisting of only Am-Driver(s) in accordance with Article 4.1 above.

PART FOUR: ELIGIBILITY

1.1 DRIVER ELIGIBILITY

(a) All Drivers must hold a C1 Grade Competition Licence or higher. Where the Entrant in a Round is not a Driver of the vehicle entered, the Entrant must hold either an Entrant's Licence issued by MotorSport New Zealand or an equivalent licence issued by another ASN.

Note: Under the provisions of the Trans-Tasman Visa Agreement between Motorsport Australia and MotorSport New Zealand Inc, Australian competitors holding both Motorsport Australia General Competition Licences and Tasman Visas may enter any New Zealand Race Series and be eligible for awards.

(b) **Number of Drivers**: Each Team may nominate a minimum of two Drivers and a maximum of three Drivers to drive the Team's vehicle at each Round (the "Driving Team").

(c) **Driving Times and Limits:**

(i) Where the Race is conducted in accordance with Part Five, Article 1.3 (a), the minimum and maximum permitted driving times for each member of a vehicle's Driving Team in each race are as follows (all, cumulative driving times in all driving stints driven by the Driver during the Race, measured in accordance with sub-Article (b) to (e) below):

(a) In each case, subject to sub-Article (f) and (g) below:

Driver Category	3 Hour Format Only
AM-Driver Minimum Driving Time	45-minutes (applies for two and three Driver Teams)
Elite Driver GT Class Vehicles Maximum Driving Time	70-minutes (applies for two and three Driver Teams)
Elite Driver All Other Vehicles Maximum Driving Time	95-minutes (applies for two and three Driver Teams)

(b) The driving time for the starting Driver's first driving stint will be deemed to commence when the leader's total time appearing in the live timing of the Race commences.

(c) The driving time for the stint of a Driver taking a re-start after the Race has been suspended by a red flag begins when the Race restarts.

(d) The driving time for each Driver's driving stint ending with a pit stop ends when the Driver's Vehicle crosses the speed restriction line at Pit Lane entry.

(e) The driving time for each Driver's driving stint beginning after a pit stop begins when the Driver's Vehicle crosses the speed restriction line at Pit Lane exit.

(f) For the avoidance of doubt, the driving time of a Driver who remains in the Vehicle during a pit stop continues uninterrupted during the pit stop.

(g) Without affecting the calculation of when the Driver's vehicle crossed the finishing line for the purposes of being classified a finisher pursuant to National Sporting Code Appendix Four Schedule Z Article 15.3, the driving time for the Driver driving on the last lap of the Race ends at the time the winning vehicle takes the chequered flag.

(ii) Where the Race is conducted in accordance with Part Five, Article 1.3(b), the maximum permitted driving laps for each Elite Driver forming part of a vehicle's Driving Team will be as follows:

Circuit	GT Class	Classes 1–5
Hampton Downs Motorsport Park International	50	68
Hampton Downs Motorsport Park National	77	105
Taupo International Motorsport Park	61	83
Manfeild: Circuit Chris Amon	66	91
Euromarque Motorsport Park	61	82
Levels Raceway	84	114
Teretonga Park	77	105
Highlands Motorsport Park	49	68

(a) The driving laps for the starting Driver's first driving stint will be deemed to commence when the Leader begins Lap 1 of the Race.

(b) The driving laps for each Driver's stint ending with a pit stop end when the Driver's vehicle crosses the Pit Lane entry speed restriction line, with the lap on which the vehicle enters the Pit Lane counting as the final lap of that stint.

(c) The driving laps for each Driver's stint beginning after a pit stop begin when the Driver's vehicle crosses the Pit Lane exit speed restriction line, with the lap on which the vehicle rejoins the circuit counting as the first lap of that stint.

(d) For the avoidance of doubt, the driving laps of a Driver who remains in the vehicle during a pit stop continue uninterrupted during the pit stop.

(d) Driver(s) may only be entered to drive one vehicle in each Race. No Driver cross entries are permitted.

(e) **Elite-drivers:** only one Elite-Level Driver is permitted per Driving Team at each Round of each Series.

1.1.1 Elite-driver Classification:

(a) NIERDC and SIERDC will maintain a shared list of Elite-Drivers for the 2026 New Zealand 3 Hour or 500km Endurance Championship, comprised of Drivers whose performances and achievements are determined by both Series' to be that of a highly skilled racing driver.

(b) Each Driver's status will be reviewed by the Eligibility Committee and published on SIERDC's website www.sierdc.com one week prior to the commencement of the 2026 New Zealand 3 Hour or 500km Endurance Championship.

(c) New Drivers to the Championship will be reviewed on a case-by-case basis by the Eligibility Committee. Any decisions will be posted no later than one week prior to any Round.

1.2 VEHICLE ELIGIBILITY

1.2.1 Eligible vehicles are: 'Closed' Saloons, Closed GT variants and Closed Sports Cars, all of Series Production manufacture with total monocoque construction.

Additionally, the following specific vehicles are eligible:

- Any NZ TLX chassis manufactured by Mitchell Race Xtreme(MRX) with chassis numbers 000X to 007X;
- Any NZ V8 SuperTourer chassis that was originally supplied by Pace Innovations prior to 1 January 2015, with a Pace chassis number starting with V8ST;
- Any Australian V8 Supercar that has previously competed in the Australian V8 Supercar Championship;
- Any MARC I or MARC II car manufactured and originally sold by Marc Cars Australia with Chassis numbers prefixed with either 'PACEGTC' or 'PACE-MARC2';

- Any FIA GT3 or GT4 homologated vehicle;
- Any Brabham BT62;
- Any Renault RS01;
- Any Panoz Esperante GTS, Ginetta G40, G50 or G55;
- Any Howe GT or TA2 car;
- Any IRC-GT Homologated as per Pace Innovation SIERDC Class 2 proposal (refer Appendix One);
- Any SRO homologated GT2 vehicles; and
- Any SRO Mercedes-AMG GT2 as per Homologation Number "NAT-GT2-004" and operating on any of the Merecedes-AMG GT2 BoP maps as below:

Mercedes-AMG GT2 BoP maps	
PL01	440kw
PL02	450kw
PL03	460kw
PL04	470kw
PL05	480kw
PL06	490kw
PL07	500kw
PL08	510kw
Party Mode	520kw

Similar vehicles to those listed in Article 1.2.1 above will be considered by the Eligibility Committee, upon application.

1.2.2 Specifically excluded from this Series are:

- 'Open' Sports Cars;
- TraNZam, Trans-am or similar type cars;
- Any Le Mans Prototype (LMP) (eg: LMP1, 2 or 3);
- Any Daytona Prototype or similar vehicle;
- Any FIA homologated GT2 and GTE vehicles; and
- Any other vehicles as decided by the Eligibility Committee.

1.2.3 Competing Classes will be determined as follows:

(a) GT Class: for vehicles listed below:

(i) Any turbo-charged vehicle homologated into FIA GT3 after 1 January 2009;

(ii) Any normally aspirated vehicle, homologated into FIA GT3 after 1 January 2014;

(iii) Any CoTF or Gen3 spec Australian V8 Supercar;

(iv) Any Brabham BT62;

(v) Any SRO homologated GT2 vehicle (with the exception of the Mercedes AMG GT2);

(vi) Any Renault RS01; and

(vii) Any other vehicle determined by the Eligibility Committee to be a GT Class vehicle.

Balance of Performance (BoP):

All GT Class vehicles will be subject to a Balance of Performance (BoP) criteria that will specify vehicle weight, engine intake restrictor size, maximum turbo boost and fuel capacity for each type of vehicle, or any other performance balancing measures.

The Table for this BoP will be subject to continuous review and will be administered by the Technical Committee who will have the final approval for any changes.

The Table for this BoP will be published on the SIERDC website www.sierdc.com. Any changes to the BoP Table will be published no later than 1700hrs on the Monday prior to each Round. No changes will be made to the BoP from this time until the end of that specific Round.

For vehicles for which the BoP Table specifies an engine air inlet restrictor size, this restrictor must be fitted in accordance with that vehicle's original Homologation document.

All GT Class Vehicles entered with forced induction must be fitted with a Motec L120 enclosed Data Logger. The data from this logger must be made available, at any time, to either the Technical Committee, the Technical Officer of the Round, or their representative, as requested.

Channels to be logged will be advised by the Technical Committee before the start of the season, and may be changed or added to before the commencement of each Round.

All data will be reviewed by an independent technical representative appointed by the Technical Committee.

All competitor data will be kept confidential.

The data logger configuration may be locked by a representative selected by the Technical Committee.

(b) **Class 1:** for vehicles listed below, weighing not less than 1,250kgs (excluding Driver) as measured at any time during the Round by the Series Scrutineer.

- **(i)** Any Porsche 992 Cup Car;
- **(ii)** Any Porsche 991.2 Cup Car, including any MR variants;
- **(iii)** Any normally aspirated vehicle, homologated into FIA GT3 prior to 1 January 2014;
- **(iv)** Any 488 or 296 Ferrari Challenge car;
- **(v)** Any SRO Mercedes-AMG GT2 BoP PL04 as outlined in Article 1.2.1;
- **(vi)** Any Australian MARC 2 car;
- **(vii)** Any Lamborghini Super Trofeo Huracan car;
- **(viii)** Any IRC-GT car Homologated as per Pace Innovation SIERDC Class 2 proposal (refer Appendix One); and
- **(ix)** Any other vehicle determined by the Eligibility Committee to be a Class 1 car.

(c) **Class 2**: for vehicles listed below, weighing not less than 1,250kgs (excluding Driver) as measured at any time during the Round by the Series Scrutineer.

- **(i)** Any Porsche 997 or 991.1 Cup Car, including any MR variants;
- **(ii)** Any 458 or earlier Ferrari Challenge car;
- **(iii)** Any pre-CoTF Australian V8 Supercar;
- **(iv)** Any vehicle homologated into FIA GT3 prior to 31 December 2008;
- **(v)** Any Australian MARC 1 car;
- **(vi)** Any Lamborghini Super Trofeo Gallardo car;
- **(vii)** Any NZ TLX chassis manufactured by Mitchell Race Xtreme(MRX) with chassis numbers 000X to 007X;
- **(viii)** Any NZ V8 SuperTourer chassis that was originally supplied by Pace Innovations prior to 1 January 2015, with a Pace chassis number starting with V8ST;
- **(ix)** Any eligible space-framed car; and
- **(x)** Any other vehicle determined by the Eligibility Committee to be a Class 2 Car.

(d) **Class 3:** Any vehicle with an engine capacity, after multiplication by any applicable equivalence factor set out in Sub-Article (g) below, of 3501cc and above that is not eligible for Class 1 or 2; and

- **(i)** Any FIA homologated GT4 car, regardless of its engine capacity;
- **(ii)** Any Howe GT or TA2 car;
- **(iii)** Any other vehicle determined by the Eligibility Committee to be a Class 3 Car, regardless of its engine capacity.

(e) **Class 4**:

(i) Any vehicle with an engine capacity, after multiplication by any applicable equivalence factor set out in Sub-Article (g) below, of 2051cc to 3500cc that is not eligible for either Class 1, 2 or 3.

(ii) Any car built by a manufacturer or manufacturer approved team under FIA TCR or WTCR regulations.

(f) **Class 5:** Any vehicle with an engine capacity, after multiplication by any applicable equivalence factor set out in Sub-Article (g) below, of up to 2050cc that is not eligible for either Class 1,2,3 or 4.

(g) The equivalence factors to be applied where applicable, are as follows:

(i)	Petrol forced induction	x1.7
(ii)	Rotary engine	x1.8
(iii)	Diesel forced induction	x1.5

1.2.3.1 Any Porsche model 996 GT3 Cup or older will be classified by its engine capacity, provided it was manufactured prior to 2007 and retains an H pattern gearbox.

1.2.4 All vehicles must comply with National Sporting Code Appendix Two, Schedule A – Driver and Vehicle Safety.

1.2.5 A safety cage is mandatory for all vehicles competing in the Series. All safety cages must be homologated by MotorSport New Zealand, with the homologation certificate contained in the vehicle's logbook. For vehicles which do not permanently reside in New Zealand, refer to National Sporting Code Schedule A, Part 1 – Article 1.2.(3).

1.2.6 All competing vehicles must have both left hand and right-hand external mirrors fitted at the start of the Race, in addition to the rear view mirror as prescribed in National Sporting Code Appendix Two Schedule A. A rear view camera may be used in place of the internal rear view mirror.

1.2.7 All vehicles with two Drivers or three Drivers must have the equivalent of a Hella 83mm light (part number 2XD 959 011-652) that can be easily seen when powered on from the front of the vehicle.

(a) When the Number 2 Driver as specified on the Round entry form is driving the competing vehicle, this light must be constantly illuminated.

(b) When the Number 3 Driver as specified on the Round entry form is driving the competing vehicle, this light must flash.

1.2.8 Carbon brake rotors are not allowed on any competing vehicle, however this does not include 'Original Equipment Manufacturer' (OEM) Carbon ceramic brakes which are allowed.

1.2.9 **Fuel:** The only fuels authorised for use in competing vehicles at any Round of this Series are as per National Sporting Code Appendix Two, Schedule A, Article 3.9 – Fuel.

1.2.10 All Drivers/Entrants agree to submit their vehicle for eligibility/fuel capacity/safety scrutineering inspections as and when required by the appointed Series Scrutineer/s, and/or Round Scrutineers, and/or a MotorSport New Zealand licensed Technical Officer. Any costs incurred during disassembly of components will be met and accepted by the Driver/Entrant.

PART FIVE: RACE FORMATS

1.1 **Test Sessions:** May be available to Drivers prior to any Round of the Series and will be subject to availability and circuit hire charges as set by the Inviting Club or host venue.

1.2 **Practice and Qualifying Sessions:** At each Round, there will be a minimum of one Practice session with a minimum of 10-minutes duration, and one Qualifying session with a minimum of 15-minutes duration.

1.2.1 Unless specifically permitted by the Clerk of the Course, all Drivers must participate in either the Practice or the Qualifying session.

1.3 **Races:** At each Round there will be one Race. The format of the Race will be specified in the Event Supplementary Regulations and will be either:

(a) 3 Hours (180-minutes) duration; or

(b) Conducted over a prescribed number of laps equivalent to not less than 500 kilometres and subject to a maximum time certain duration as specified in the Event Supplementary Regulations.

1.4 **Starting positions:** The start grid positions will be determined from the fastest Qualifying times achieved by each competing vehicle in the Qualifying session, fastest vehicle to the front.

(a) The Driver of each vehicle who sets the fastest time in Qualifying must start the Race.

1.4.1 **Assembly:** 3-minutes after the vehicles have been released to the starting grid, the pit exit will be closed. Any vehicles that are late will start from the pit exit under the procedures established in National Sporting Code Appendix Four, Schedule Z, Article 8.6.

1.5 **Starting procedures:** Will be by 'rolling start' in a 2 x 2 formation in accordance with National Sporting Code Appendix Four, Schedule Z – Article 8.4.

1.6 **Pit Stops:**

(a) Where the Race is conducted in accordance with Part Five, Article 1.3 (a), all competing vehicles must make at least one pit stop per Race in accordance with Part Four, 1.1 (c). This pit stop is not permitted under red flag conditions.

(b) Where the Race is conducted in accordance with Part Five, Article 1.3 (b):

(i) Any GT Class vehicle that has an Elite Driver entered in the Driving Team must complete a minimum of three Driver changes during the Race.

(ii) All other vehicles must complete a minimum of two Driver changes during the Race.

(iii) Driver changes must not be completed while the Race is suspended under red flag conditions, unless the Vehicle has crossed the Pit Lane entry speed restriction line prior to the display of the red flag signal.

1.7 During a red flag situation no vehicle may be worked on in pit lane or Parc Fermé. Any vehicle removed from pit lane is subject to Parc Fermé conditions and must not be worked on, unless withdrawing from the Race. The only vehicles able to be worked on are those already in the pit paddock or pit garage when the red flag was first displayed.

1.8 **Safety Car Procedures:** Will be as outlined in National Sporting Code Appendix Four, Schedule Z.

1.9 **Finishing Procedure:**

(1) Where the Race is conducted over 3 Hours (180-minutes):

(i) The last lap board will be shown to the leading vehicle when it crosses the start/finish line after either:

(a) 2 hours, 59 minutes of Race time; or

(b) Such shorter Race time as may have been determined by the Clerk of the Course in accordance with Part Five, Article 1.10; has elapsed. The end-of-Race signal will be displayed to the leading vehicle at the completion of the following lap.

(2) Where the Race is conducted over a prescribed number of laps in accordance with Part Five, 1.3 (b):

(i) When the leading vehicle commences the final scheduled lap of the prescribed Race distance, the last lap board will be shown. The end-of-Race signal will be displayed to the leading vehicle at the completion of that lap.

(ii) If the maximum time certain duration has been reached before the leading vehicle has commenced the final scheduled lap, the last lap board will be shown to the leading vehicle when it next crosses the start/finish line after the expiry of the maximum time certain duration. The end-of-Race signal will be displayed to the leading vehicle at the completion of the following lap.

1.9.1 As per National Sporting Code Schedule Z Article 14.4(6), failure to display the last lap board does not affect the scheduled Race distance.

1.9.2 Race Winner: At each Round, the winner will be the Driving Team whose vehicle has completed the greatest distance at the moment the end-of-Race signal is given.

To be classified as a finisher, a vehicle must cross the finish line under its own power and on the circuit itself (not pit lane) within the 4-minutes immediately after the signalling of the finish of the Race and have covered at least 75% of the distance achieved by the appropriate Class winner.

1.10 At all Rounds, the Clerk of the Course and/or the Stewards of the Meeting, have the right to shorten and/or cancel any Practice or Qualifying session and/or any Race in the case of a Force Majeure Event, and to declare a Race result.

2. POINTS

2.1 Points for each respective Series will be calculated as follows and in accordance with Article 2.1.1 below:

(a) Overall finishing position within each Race, at each Round, and

(b) Overall finishing position within each Class, within each Race, at each Round.

(c) For the New Zealand 3 Hour or 500km Endurance Championship, the finishing position of Drivers not entered into the New Zealand 3 Hour or 500km Endurance Championship will be disregarded for the purpose of calculating points.

2.1.1 Points table:

Position	Points	Position	Points	Position	Points
1st	75	9th	47	17th	30
2nd	70	10th	44	18th	28
3rd	66	11th	42	19th	26
4th	62	12th	40	20th	25
5th	59	13th	38	Points reduced by 1 point per place thereafter.	
6th	56	14th	36		
7th	53	15th	34		
8th	50	16th	32		

2.1.2 Bonus Points: will also be issued at all Rounds on the following basis:

(a) For every vehicle that Qualifies for their Class, but does not start the Race for their Class, that competing vehicle's Driver(s) will receive 10 points.

(b) For every vehicle that starts the Race for their Class, that competing vehicle's Driver(s) will receive an additional 20 points.

2.2 If a Driver changes their vehicle during the season, overall Series and Championship points will carry over and Class points will also carry over providing they stay within the same Class.

2.3 **Ties:** In the event that two or more Drivers have an equal number of points at the conclusion of either the North Island 3 Hour or 500km Endurance Series, South Island 3 Hour or 500km Endurance Series, or New Zealand 3 Hour or 500km Endurance Championship (i.e. a tie), the Driver achieving the higher position will be determined using the following method:

(a) The greater number of first placings obtained and progressing down the finishing positions in all Rounds counting for the respective Series. If an equal result is still obtained, then;

(b) The greater number of pole position Qualifying positions obtained and progressing down the Qualifying positions in all the Qualifying sessions for all Rounds counting for the respective Series. If an equal result is still obtained, then;

(c) The number of the single fastest lap achieved in each Race and progressing down the fastest laps in each Race in all Rounds counting for the respective Series. If an equal result is still obtained, then;

(d) The respective Series (NIERDC, SIERDC, or MotorSport New Zealand), at their sole discretion, will determine the winner, or may declare those still tied to be equal winners.

PART SIX: RACE OPERATIONAL PROCEDURES

1. ARRANGEMENT OF THE PITS AND TYRE WARMERS

1.1 Any Driver/Entrant can decorate their pit garage/marquee. No alteration requiring drilling, welding or modifications to the pit garage/marquee is permitted.

1.2 Any decoration of the installations and the floor should only be of a temporary nature. The fitting of carpeting or any other decoration is allowed if it is done using non-flammable materials.

1.3 Folding brackets, flexible supports for air, fuel or lighting must:

- **(a)** Not extend beyond the outer limit of the "working lane".
- **(b)** Be situated at least two metres above the ground.

1.4 Air bottles must be firmly attached or anchored once their protective lid is removed. Protection around the valves and regulator must be permanently in place. The conformity of the installations and the dates of validity of the air bottles may be checked at any time.

1.5 Equipment for warming the tyres:

1.5.1 Non-electrical (combustion heated) tyre warming tents are allowed but must be in the open area immediately behind the pits, and a fire extinguisher must be permanently on-hand within close proximity to the equipment when it is operating.

1.5.2 Electric tyre warmers may be used inside, or outside the rear, of the garage. The tyres in their warmers must be placed so as to still allow easy access to the rear door of the garage in case of emergency. A fire extinguisher suitable for electrical fires must be on-hand within two metres of the electrical equipment at all times when in operation.

2. PIT STOP PERSONNEL

2.1 Each team is authorised a maximum of six pit crew members who are the only team personnel allowed to cross the Pit Box Control Line during a pit-stop.

- **(a)** A maximum of two of these pit crew members will be designated the ‘Refuelling Crew’.
- **(b)** This maximum does not include the Drivers of the competing vehicle, the Dedicated Fire Marshal (Part Six Article 2.2) and (where appropriate), the dedicated overhead rig valve operator (Part Six Article 2.3).

2.2 Dedicated Fire Marshal: When refuelling is taking place, each team pit area must have a Dedicated Fire Marshal. Their sole responsibility is to man the fire extinguisher for the duration of the pit stop and they cannot take part in any other job.

2.2.1 The Dedicated Fire Marshal and Refuelling Crew must wear fire-resistant safety apparel as set out below:

- **(a)** Overalls* complying with the standards set out in National Sporting Code Appendix Two, Schedule A, Part One, Article 4.3 Chart (1); minimum of Line B;
- **(b)** Balaclava complying with the standards set out in National Sporting Code Appendix Two, Schedule A, Part One, Article 4.3 (1); minimum of Line B;
- **(c)** Socks, shoes, and gloves complying with the standard set out in National Sporting Code Appendix Two, Schedule A, Part One, Article 4.3 Chart (1); minimum of Line C; and
- **(d)** Safety goggles, while refuelling only.

Note: *Where overalls are worn in compliance with National Sporting Code Appendix Two, Schedule A, Part One, Article 4.3 (1); of Line B, underwear (while recommended) is not compulsory.

2.2.2 When refuelling is taking place, the Dedicated Fire Marshal must be equipped with a fully serviced operable dry chemical fire extinguisher of minimum capacity of 9kg.

2.3 **Dedicated overhead rig valve operator:** All teams using overhead refuelling systems must have a dedicated person whose sole responsibility is to operate the self-closing valve. This person must wear protective clothing as set out in Part Six Article 2.2.1 (a), (b) (c) and (d). Their sole responsibility is to man the overhead rig self-closing valve and this person cannot take part in any other job when refuelling is taking place. If the dedicated overhead rig valve operator takes part in any other job once refuelling is complete, they will be counted as part of the six pit crew members as per Article 2.1 above.

Note: The sharing of refuelling crews and equipment is permitted.

3. PIT BAYS AND DRIVER CHANGES

3.1 Each vehicle may only make pit stops in the pit lane in the pit box allocated to the vehicle by the Organisers.

3.2 Each vehicle must come to a complete stop before any work or driver changes are carried out.

3.3 The Organisers may allocate a pit box to more than one vehicle.

3.4 A vehicle that stops in pit lane that cannot reach its pit box under its own power may be pushed to its pit box.

3.5 A vehicle that overshoots its pit box may stop in the pit lane but must not select reverse gear and instead may be pushed back to its pit box.

3.6 Any pit crew member from any team may push a vehicle in pit lane except the Driver of the vehicle at the time it stops.

3.7 The vehicle must come to a complete stop prior to the Driver's safety harness being unfastened. The vehicle may not leave the pit bay until the safety harness and window net, if fitted, has been fully refastened.

3.8 All Driver safety harnesses belts must be securely fastened when the vehicle is moving under its own power.

3.9 The attachment of elastic retractors or cords on the shoulder harness straps for use during a Driver change is prohibited.

4. PIT LANE, PIT STOPS, PPE AND FUEL

4.1 During Testing, no refuelling is allowed to take place in pit lane, and no refuelling equipment may be set up in pit lane on the Test Day. During this time, fire resistant apparel and PPE are recommended but not required in pit lane.

4.2 Teams are only allowed to commence the setting up of refuelling equipment 15-minutes after the end of the last Test session or Practice session on the Test Day.

4.3 After the designated time for setting up refuelling equipment has begun, all team members working on refuelling equipment must wear protective clothing as set out in Part Six Article 2.2.1 (a), (b), (c) and (d).

4.4 On any day during which a Race is held, any team member who crosses the Pit Box Control Line, at any time, must wear protective clothing as set out in Part Six Article 2.2.1 (a), (b), and (c). This applies regardless if any on-circuit activities are taking place or not. This requirement extends past the conclusion of Races if refuelling equipment is being emptied and dismantled. The only exclusion from this rule are team members crossing pit lane directly to and from the signalling bay on pit wall.

4.5 Any crew members that are dealing with fuel or refuelling equipment (whether full, partly full or empty) at any time during the Event, including the Test Day, must wear protective clothing as set out in Part Six Article 2.2.1 (a), (b), (c) and (d).

(a) The above is applicable anywhere at the venue including pit lane, pit garages, pit paddock, transporters, trailers and any fuel storage areas. At any time that fuel is being transferred, pumped or poured, the Dedicated Fire Marshal as per Part Six Article 2.2 must be present.

4.6 It is compulsory to use solid incompressible components capable of supporting the vehicle in the event of a failure of jacking equipment. The components must be placed under the vehicle at all times when any person is working on the vehicle in a manner that involves any part of their body (other than hands and forearms) being under any part of the vehicle. Specifically excluded from this rule are standard wheel changing operations.

4.7 If external jacks are used, it is permitted to use up to a maximum of two external jacks in the wheel change phase of the pit stop, but two wheels of the vehicle must stay in contact with the ground at all times.

4.8 At all times during wheel changing, all wheels that are being changed must be under full control of the Wheel Crew. Any wheel or wheel nut which rolls out of or down the Working Lane may result in a penalty.

4.9 Wheel Nut/Rattle Guns:

(a) For vehicles with centre lock wheels only two wheel nut guns are permitted to be across the pit box control line at any one time during any pit stops.

(b) For vehicles with multiple wheel nuts per wheel, a maximum of four wheel nut guns are permitted to be across the pit box control line at any one time during any pit stop.

5. REFUELLING AND DEFUELLING

Note: All Drivers, Entrants and teams/pit crew are to be familiar with the MotorSport New Zealand Code of Practice for Fuel, which may be viewed on the MotorSport New Zealand website: https://www.motorsport.org.nz/technical/fuel/

5.1 All refuelling and defuelling of vehicles must be done in accordance with the MotorSport New Zealand Code of Practice for Fuel.

5.2 The amount of fuel stored in or immediately adjacent to each team pit area (in pit lane) must not exceed 209 litres.

5.3 **Refuelling:** All refuelling must be carried out in the designated pit box under the conditions as specified in the Event Supplementary Regulations, which may impose additional requirements to those detailed in these Regulations.

5.3.1 A grounding (earth wire) must be attached to the vehicle (preferably the exhaust pipe) during the refuelling process. It is the Refuelling Crew's responsibility to attach and remove this grounding wire.

5.3.2 In addition to the requirement outlined in Part Six Article 2.2 above, an additional fully serviced operable dry chemical fire extinguisher of minimum capacity of 9kg must be placed in a clear space near to the fuel container and all members of the Team must be briefed as to the operation of the extinguishers.

5.3.3 All vehicles (except those using 'dry-break' systems) must stop their engines for the duration of the refuelling process.

5.3.4 No other work may be performed on the vehicle during the refuelling process unless a dry break refuelling system is used.

5.3.5 The fuel delivery hose may only be moved across the pit box control line from the pit garage a maximum of 3-minutes prior to any pit stop. While in pit lane, the fuel delivery hose must at all times be attended by the Refuelling Crew.

5.3.6 If fuel is spilt during the refuelling process, then refuelling must stop immediately and not recommence until the spilt fuel is fully cleaned up. The vehicle being refuelled must have its engine turned off, and then may be pushed clear (not driven) for safety while the spill is cleaned up. Any fuel spilt during the refuelling process must be completely cleaned up prior to the vehicle leaving the pit box.

5.4 REFUELLING EQUIPMENT:

5.4.1 The following type of equipment is authorised:

- Hand-held fuel containers;
- Dry-break hand-held fuel containers;
- Sealed drums of 209 litre maximum capacity with hand-operated pump; and
- Overhead (gravity fed) refuelling system with dry break connectors.

5.4.2 The Organisers reserve the right to inspect and if necessary, approve all refuelling and safety equipment prior to it being used.

5.4.3 All overhead refuelling systems must:

(a) Be electrically earthed.

(b) Have a maximum capacity of the reservoir, including the delivery hose, not exceeding 220 litres. Reservoirs must include 10% ullage (air space) at all times.

(c) The maximum height of any part of the system which contains fuel is two metres above the pit lane; only non-fuel holding connections and vents are permitted above this height.

(d) All overhead systems must have an automatic self-closing valve for the **dedicated overhead rig valve operator.** The self-closing valve must be attached directly to the fuel reservoir and must close immediately, stopping the flow of fuel from the reservoir, when pressure on the handle is released.

(e) All fuel dry break couplings (delivery and vent) must be of an FIA approved design.

(f) The fuel delivery and vent hose must be of a flexible, reinforced and fuel resistant, rubber or plastic material. These hoses must be a minimum of 2.5 metres in length. The maximum internal diameter of these hoses is 58mm (2 ¼ inch).

(g) The vent hose must remain open at all times during the refuelling operation.

(h) An earthing connection between the refuelling system and the vehicle must be made prior to refuelling commencing, in accordance with Part Six Article 5.3.1.

(i) Refuelling systems must be secured to prevent them being overturned.

(j) All overhead refuelling systems must be fitted with a fuel flow restrictor in the refuelling hose. The restrictor must be fitted within 150mm of the end of the fill hose attached to the dry break coupling, or be bolted directly to the underside of the fuel reservoir in accordance with FIA Regulations as shown in Appendix 2. All fuel being transferred into the vehicle must pass through this restrictor.

(k) The restrictor hole must be round and have a maximum diameter of 32mm for 3mm. All internal bore dimensions must remain parallel with the centerline, and no chamfering or radiuses are permitted, or be bolted directly to the underside of the fuel reservoir in accordance with FIA Regulations as shown in Appendix 2, where Diameter “D” is 32mm maximum.

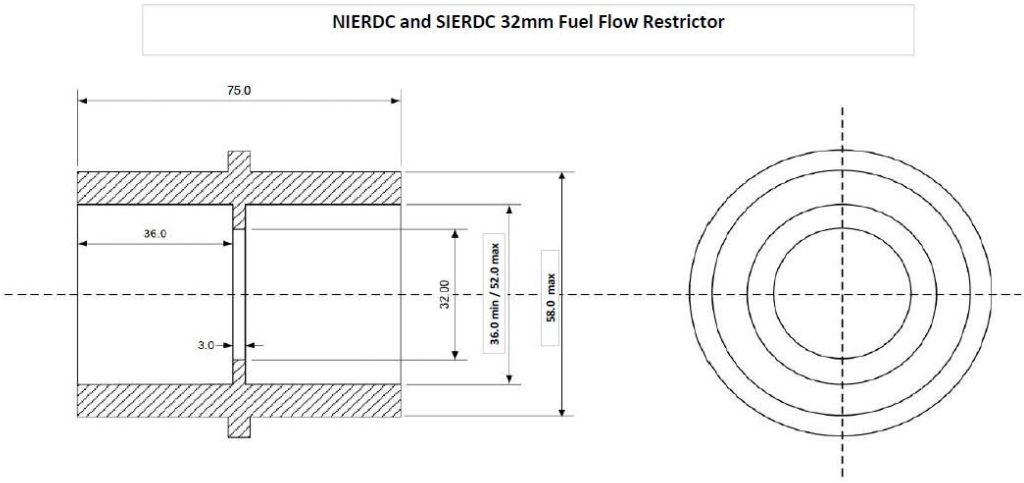

6. FUEL TANKS

6.1 **Vehicle fuel tanks:** Must be in compliance with National Sporting Code Appendix Two, Schedule A, Article 4.12.

6.2 **Vehicle Fuel System Capacity:** Must not exceed 120 litres (no allowance for temperature will be applied); this is the maximum fuel storage capacity of the vehicle and includes all fuel system components. This includes but is not limited to all fuel tanks; auxiliary, reserve, swirl or surge tanks; fuel lines, fillers and filters etc. This capacity may be checked prior to and/or after the competition as per Part Six Article 6.4.

6.3 It is the Driver/Entrant's responsibility to ensure:

- **(a)** Their vehicle does not exceed the maximum authorised vehicle fuel storage capacity as defined in Part Six Article 6.2;
- **(b)** Their vehicle is fitted with a dry-break fuel connector or fuel line connection fitted within 500mm of the engine's fuel rail/carburettor that will allow draining of the fuel system for checking purposes;
- **(c)** An appropriate length/type of hose with connector is provided for use by the appointed Scrutineer; and
- **(d)** Their vehicle has a fuel pump out override switch if required, to permit operation of the fuel pressure pumps and all lift pumps with the engine not running.

6.4 **Checking Procedure for Vehicle Storage Capacity:**

- **(a)** The vehicle must be positioned on a flat level surface.
- **(b)** The vehicle must be fuelled to maximum capacity (being the point that the fuel system breather begins to display venting adjacent to the tank) using the vehicles normal refuelling method.
- **(c)** The vehicle fuel system (see Part Six Article 6.2 above for definition) will be primed to ensure that all elements of the system are full.
- **(d)** Repeat Part Six Article 6.4(b).
- **(e)** Vehicles that are fitted with auxiliary fuel tanks that are not fuelled via their normal in-race refuelling method must have these auxiliary tanks filled prior to starting the test.
- **(f)** The maximum fuel storage capacity of the vehicle will be determined by the quantity of fuel that can be pumped from the vehicle (at the dry-break fuel connector specified in Part Six Article 6.3(b)) by the normal operation of the vehicle's fuel system.
- **(g)** Measurement will be made by one of the designated Scrutineers or their assistant using an approved MotorSport New Zealand device.

(h) All personnel involved in the checking of the vehicle storage capacity will wear the correct PPE outlined in the MotorSport New Zealand Code of Practice Fuel. No other personnel are permitted to be within five metres of the vehicle.

6.5 All fuel being placed into the vehicle must be done so at ambient temperature. Any device or substance which changes the temperature of the fuel from the ambient air temperature is prohibited.

7. TELEVISION AND IN-CAR CAMERAS

7.1 All in-car camera installations are subject to inspection and approval by the Series Scrutineer and/or Event Chief Scrutineer.

7.2 Any in-car cameras that are fitted and approved by the Series Scrutineer must make their footage available to the Clerk of the Course and/or Stewards as soon as possible if so requested.

8. PARC FERMÉ

8.1 Unless otherwise instructed, at the conclusion of the Race, Drivers will be required to drive their competing vehicle directly (and without any team personnel/crew intervention) to the designated Parc Fermé, which may be on the starting grid of the circuit, or an alternative location which will be notified on the Official Notice Board of the Meeting.

Note: Drivers should ensure that they and all their team personnel are familiar with the Parc Fermé regulations and limitations as detailed in National Sporting Code Article 60.

8.2 The only people allowed into the Parc Fermé area are the Driver(s) of the vehicles and one team member per vehicle who may only assist the Driver, take tyre pressures and open the vehicle for ventilation including the bonnet or boot.

8.3 The Series Scrutineer may authorise entry of additional team personnel for the purposes of vehicle eligibility inspections.

PART SEVEN: PENALTIES

1.1 When Schedule P, NSC.4 is applied due to a breach of these Accredited Series/Championship Regulations by any Driver/Entrant or team member additional penalties may be applied by the Clerk of the Course as follows:

(a) During Practice or Qualifying, the Driver/Entrant may be moved three places back in the starting grid of that Driver/Entrant's next race.

(b) During the Race, the Driver/Entrant may have a time penalty of up to fifty seconds applied, or a drive-through penalty issued to their total Race time.

1.2 PENALTY SCHEDULE

Note: Any penalty that results in a vehicle being excluded from any Qualifying or Race results will automatically result in the loss of any Series/Championship points that should have been awarded.

	OFFENCE	STANDARD PENALTY
P7.2	Failure to correctly illuminate Co-Driver light (Part Four, Article 1.2.7)	**Practice and Qualifying:** grid spot penalty of one position. **Race:** 5-second Time Penalty.
P7.3	Driving through the red light/flag at pit lane exit.	**Practice and Qualifying:** as per NSC Schedule Z A4Z.18. **Race:** as per NSC Schedule Z A4Z.18, plus a deduction of one racing lap at the discretion of the Clerk of the Course or Race Director.
P7.4	Failure by crew to wear the required safety apparel and PPE (Part Six, Article 4.4)	**Practice and Qualifying:** First offence: grid spot penalty of three positions. Second offence: further grid spot penalty of five positions. **Race:** First offence: drive through penalty, or up to 50-second time penalty added to the Driver's race time if breach found post-race. Second offence: Exclusion from the Race. Third offence: Deduction of 50 Series and/or Championship Points.
P7.5	Starting to work on the vehicle prior to the vehicle coming to a complete stop (Part Six, Article 3.2)	**Practice and Qualifying:** start from pit exit for the Race. **Race:** drive-through penalty or up to 50-second time penalty added to the Driver's race time if breach found post-race.
P7.6	Working on vehicle in pit lane under red flag conditions (Part Five Article 1.7)	**Practice and Qualifying:** No penalty **Race:** Exclusion from Race
P7.7	Failure to use incompressible stands (Part Six Article 4.6)	**Practice and Qualifying:** grid spot penalty of three positions. **Race:** drive-through penalty, or up to 50-second time penalty added to the Driver's race time if breach found post-race.
P7.8	Using the vehicle's reverse gear in pit lane, in any session or Race (Part Six Article 3.5)	**Practice and Qualifying:** grid spot penalty of three positions. **Race:** drive-through penalty, or up to 50-second time penalty added to the Driver's race time if breach found post-race.

	OFFENCE	STANDARD PENALTY
P7.9	Driver pushing vehicle in pit lane (Part Six Article 3.6)	**Practice and Qualifying:** grid spot penalty of three positions. **Race:** drive-through penalty, or up to 50-second time penalty added to the Driver's race time if breach found post-race.
P7.10	Failure to pit in front of allocated pit bay (Part Six Article 3.1)	**Practice and Qualifying:** grid spot penalty of three positions. **Race:** drive-through penalty, or up to 50-second time penalty added to the Driver's race time if breach found post-race.
P7.11	Failure by team member(s) to comply with any Regulation relating to fuel and fuel handling.	First breach per Round: $300 fine Second and any subsequent breach per Round: **Practice and Qualifying:** grid spot penalty of five positions. **Race**: drive-through penalty, or up to 50-second time penalty added to the Driver's race time if breach found post-race.
P7.12	Spilt fuel not cleaned up before vehicle leaves pit bay (Part Six Article 5.3.6).	**Practice and Qualifying:** grid spot penalty of three positions. **Race:** drive-through penalty, or up to 50-second time penalty added to the Driver's race time if breach found post-race.
P7.13	Exceeding the maximum allowable fuel capacity.	**Practice or Qualifying:** start from pit exit for the Race. **Race:** exclusion from the Race.
P7.14	Driver/Entrant failing to comply with correct decal placement.	**Practice or Qualifying:** loss of Practice/Qualifying times. **Race:** drive-through penalty, or up to 50-second time penalty added to the Driver's race time if breach found post-race.
P7.15	Driver/Entrant failing to comply with BoP requirements	**Practice or Qualifying:** Loss of Practice/Qualifying times. **Race:** Exclusion from Race.
P7.16	Failing to comply with the minimum Driver change requirements within the Race.	**Race:** Exclusion from Race.
P7.17	Exceeding the maximum permitted Elite Driver driving limits (including maximum driving time or maximum laps, as applicable).	**Race:** Up to 10-minutes time penalty.

APPENDIX ONE

IRC GT SPECIFICATION
APPROVED SPECIFICATION FOR NIERDC/SIERDC + NZEC CLASS 2

BELOW ARE THE BODYWORK OPTIONS CURRENTLY AVAILABLE:

MODEL M

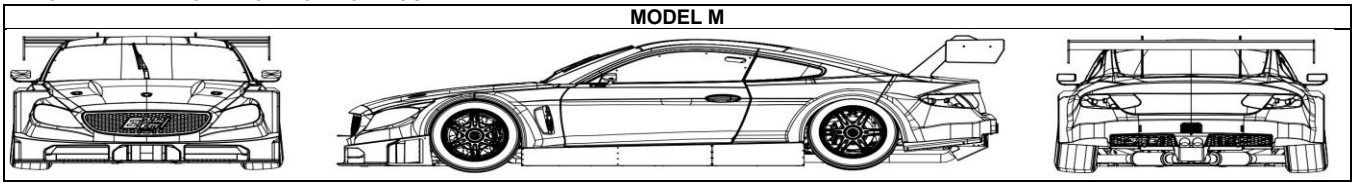

MODEL F

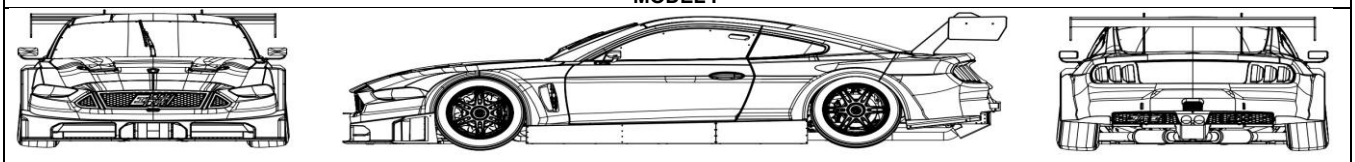

MODEL C

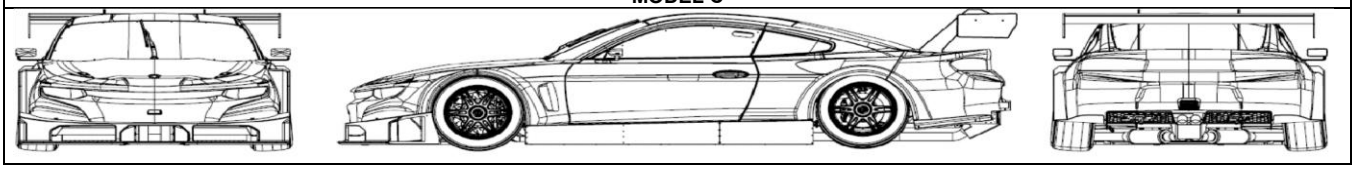

BELOW IS THE APPROVED SPECIFICATION OF THE IRC GT FOR NIERDC/SIERDC + NZEC CLASS 2:

CHASSIS	Motorsport Australia approved chromoly spaceframe chassis. - Bolt-on front and rear frames (axle carriers) and bolt-on front and rear crash structures to ease damage repair - ability to run a passenger seat
BODYWORK	Composite - All panels are non-model specific, except front and rear clips - Polycarbonate screens and windows
ENGINE	6.2L GM LS3 crate engine with 3-stage dry sump system - Dynamometer tested by the engine builder and **sealed** by Pace Innovations - 550 HP, 705 Nm, 6800 RPM
ENGINE MANAGEMENT	MoTeC M150 ECU - Locked by Pace Innovations and the level of customer **access is restricted** by Pace Innovations
ELECTRONICS	MoTeC PDM 30 - MoTeC 15-button keypad
DATA LOGGING	MoTeC Data Logging Level 3 with MoTeC Pro Analysis. All data logged through the ECU
DRIVETRAIN	Rear wheel drive - Holinger 6-speed MFT transaxle - Paddle shift
STEERING	Multi-function steering wheel - Adjustable and collapsible Woodward steering column - ZF electric steering rack.
PEDALS	Hanging pedal box - Driver-adjustable brake bias
BRAKING SYSTEM	Full Brembo brake package with Bosch Mk5 ABS system. 380mm (54mm annulus) rotor, 6 piston caliper **OR** endurance option with 70mm annulus rotor (front) 313mm rotor (45mm annulus), 4 piston caliper (rear)
SUSPENSION	Double wishbone suspension - Direct acting, one-way adjustable coil-over dampers **sealed** by PACE Innovations. Modular upright system that can be used on all corners of the car to reduce spare parts costs
AERODYNAMICS	Plastic front splitter with adjustable rear wing and optional rear diffuser.
RIMS AND TYRES	18" x 11J ET25.4 centre lock front and rear wheel **OR** 18" x 12J ET34 centre lock front wheel - 18" x 12.5J ET41 centre lock rear wheel
FUEL SYSTEM	110L-capacity fuel system - FIA-compliant, Fuelsafe 'Enduro Cell' fuel tank - 98 octane minimum
SAFETY	Lifeline Zero 360 fire extinguisher with 3M Novec 1230 agent - FIA-compliant dual driver nets - FIA-compliant 6-point safety harness
DIMENSIONS	Total Length = 4934mm , Total Width = 1970mm, Total Height = 1295mm. Wheelbase = 2800mm, Track = 1720mm
DRY WEIGHT	**1250kg enforced minimum weight** by means of PACE Innovations weight tray
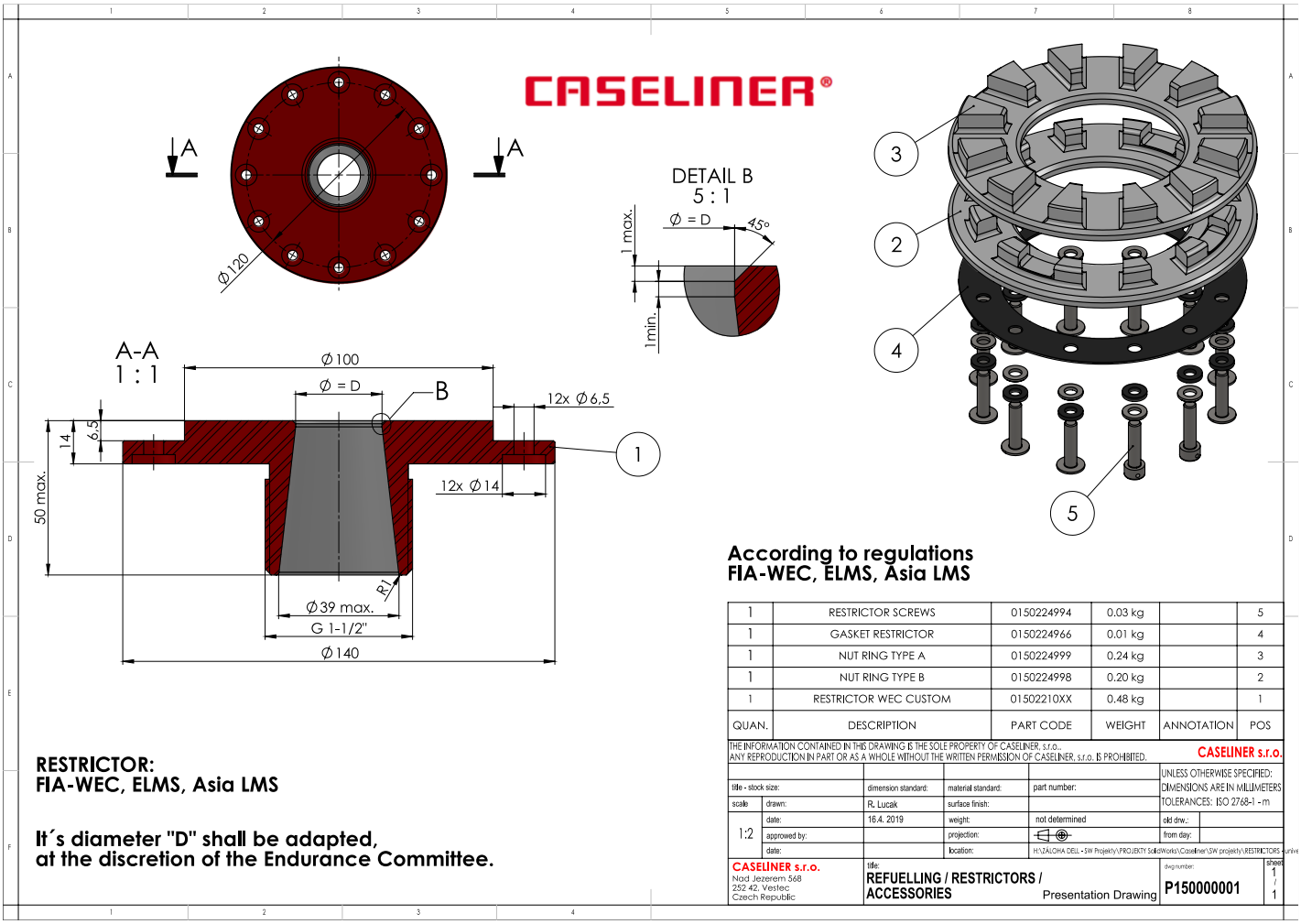
APPENDIX TWO